MANTECH Publications

Journal of Product Design, Quality Engineering & Technology
Volume 6, Issue 1, January-April 2021

Design and Optimization of a Multi-Cutting Computerized Power Hacksaw Machine

Juhi Singh[1], Geetika Tyagi[2]
Student[1], Professor[2]
Department of Mechanical Engineering
Pranveer Singh Institute of Technology
Corresponding Author's Email id: *-juhi440@gmail.com[1]*

Abstract

The aim of the Automatic Saw Cutting venture is to cut metals and woods without the need for human intervention. A self-weight is connected to the responding device to provide the required descending power for the hacksaw sharp edge to cut the work piece. When a piece is cut, a breaking point switch would automatically give a signal to stop the engine immediately, which the microcontroller would sense. If more pieces need to be removed, we repeat the process until the predetermined number of work-pieces has been cut.A pneumatic barrel or a seat savvy is utilized for holding the work-piece when cutting task is going on.

Keywords*: - Power hacksaws, designing, automatic saw cutting*

INTRODUCTION

To cut large areas of metal, power hacksaws are used. Cutting solid shafts or poles with diameters greater than fifteen millimetres is difficult with a standard hand held hacksaw.

One angle that encouraged us to mechanise the naturally sustaining of work-piece was the way that the administrator needs to motivate the work-piece to the desired duration into the bad habit. As a result, in the United States in the 1920s, a control hacksaw machine was developed to complete the difficult and time-consuming task.

Saw that has been programmed In today's businesses, cutting costs is beneficial. Metals and woods must be sliced to

Page 8-14 © MANTECH PUBLICATIONS 2021. All Rights Reserved

different shapes in mechanical organisations. It takes a long time to use manpower, and accuracy isn't always guaranteed. Cutting operation is preformatted as a result of using this task.So it spares the time just as diminishes the labor. The exactness additionally accomplished in this venture. This task is structured with microcontroller, Real time clock, Relay driver circuit alongside transfers, Keypad and Mechanical course of action.



Figure 1: Power hacksaw

This power hacksaw machine appeared in figure 1 is considered as a programmed machine in light of the fact that the administrator need not be there to give the responding movement and descending power on the work-piece so as to cut it. When the administrator has bolstered the work-piece till the required length in to the machine and begins the machine, at that point the machine will cut until the work-piece has been totally sliced in to two pieces.

The Problem of intensity hacksaw machine is the nourishing of work-piece, which is wiped out by including the numbers Hacksaw Frame which is separable so it will cut the encouraging time of work-piece and increment the no. of work piece to be cut, which coordinates the work-piece in to the seat savvy. After this, a pneumatic seat insightful is stretched out to hold the work-piece solidly to capture the development of work-pieces while being cut. Strategy I am utilizing for its Design is Autodesk Inventor V-2014 and for Stress Analysis I am utilizing Altair.

LITRETURE SURVEY

1. This work is to computerize the traditional power hacksaw machine so as to accomplish high efficiency of work-pieces than the power hacksaw machine utilizing Microcontroller. the machine naturally sustains the given length of work-piece in to a throw and begins to cut till the given number of work-pieces has been cut.

2. Introduction 0f 8051 microcontroller and inserted Systems for utilizing gathering and sorts of microcontroller.

Page 8-14 © MANTECH PUBLICATIONS 2021. All Rights Reserved

3. The scope of Power Hacksaw Machines made by us is broadly utilized for different purposes such cutting of metals and different materials. Every one of these machines are broadly refreshing for quick and smooth usefulness, fine cutting, inconvenience free activities and high effectiveness. We redo these machines are per the customer's determinations.

4. In Engineering Technology and Industrial Technology programs. A broad cluster of mechanical applications is given to persuade and invigorate understudies' enthusiasm for the field. It centers around the plan, investigation, task, and support of liquid power frameworks. This book places accentuation on seeing how liquid power frameworks work and on their down to earth applications.

5. The point of this proposition is to look at different recreation models of symmetrical cutting procedure with one another just as with different analyses. The impacts of a few procedure parameters, for example, erosion and partition measure, on the outcomes are examined.

6. The business achievement of another item is affected when to showcase. Shorter item lead-times are of significance in a focused market. This can be accomplished just if the item advancement procedure can be acknowledged in a moderately little timeframe.

7. The reason for The Investigation Is two-crease; first to decide tentatively the impact of changes In the rake edge and Cutting pace on the sort of chip created amid symmetrical machining of aluminum and afterward to build up a summed up model of the symmetrical metal cutting procedure.

8. Throughout history human, vitality has commonly been connected using the arms, hands, and back. With minor special cases, it was just with the innovation of the sliding-situate paddling shell, and especially of the bike, that legs likewise started to be considered as an "ordinary" methods for creating power from human muscles.

9. This is enhanced structure of the human controlled wood cutting machine which gives the less endeavors of man and normally

Page 8-14 © MANTECH PUBLICATIONS 2021. All Rights Reserved

utilized in provincial territories where there is no power supply. The structure guarantees a smooth activity amid the cutting procedure. The cutting power is given by methods for chain drive, gear get together and other kinematic instrument and all the parameter should be streamlined to get greatest cutting power.

10. There are numerous modern applications where round bar or square bars are required to be worked on various machines to make machine segments, for example, Shafts, Bolts, Screws and so on the Multi-way control hacksaw machine is created. This paper proposes the model of multi-way hacksaw machine which can cut four pieces all the while with no twitch and least vibrations.

11. Fabricate and tentatively explore the working of Pedal Driven Hacksaw (PDH). PDH is taking a shot at Slider Crank Mechanism. The investigation was finished utilizing PDH and pressed wood work pieces. The principle parts of PDH are hack saw, responding pole welded to the pedal of a bike, flywheel, sprocket and chain drive.

12. This is a human fueled machine keeps running on chain drives for the most part with human endeavors. In any case, on the off chance that you needed to work this machine by electric power this machine can likewise does that. It has some extraordinary connection so utilize both human power just as electric power. The structure is and can be assembled utilizing metal base, chain, pulley ,elastic belt, pounding wheel, saw, bearing, foot pedal (for worked by human),electric engine, chain attachment.

13. Designed and built up a naturally responding pedal controlled power generator (ARPPEG) related to the administration and authority over reaping the dynamic vitality, power age, electric stockpiling and the yield of power. As indicated by the task testing results, this framework has been demonstrated to successful in power age.

MODEL OF MULTI LEVEL POWER HACKSAW MACHINE

Designer is programming which is utilized for creation and alterations of the items. In INVENTOR configuration, displaying multi body dynamic and structure number cruncher highlight is accessible.

Page 8-14 © MANTECH PUBLICATIONS 2021. All Rights Reserved

Configuration implies the way toward making another article or changing the current one, Drafting implies there introduction or thought of the item, Multi Body Dynamic methods we can check the model in real running condition by applying power or weight and In Design Calculator we can include apparatus, sprocket and chain, pulley and belt spring's stray pieces, clevis stick, c-channel, edges, I-segment and a lot more with appropriate estimation in legitimate way.

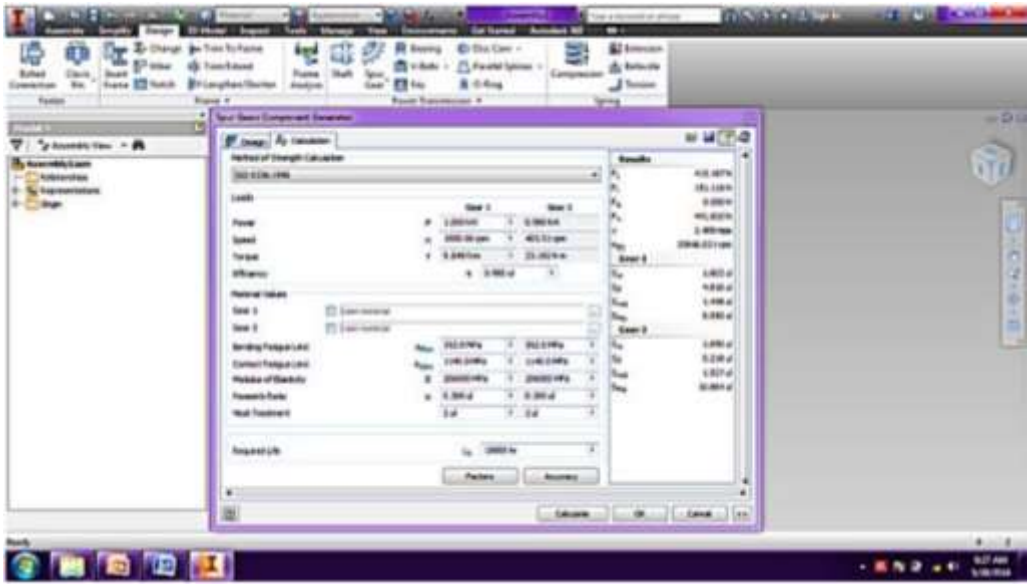

Figure 2: Screen shot of the analysis

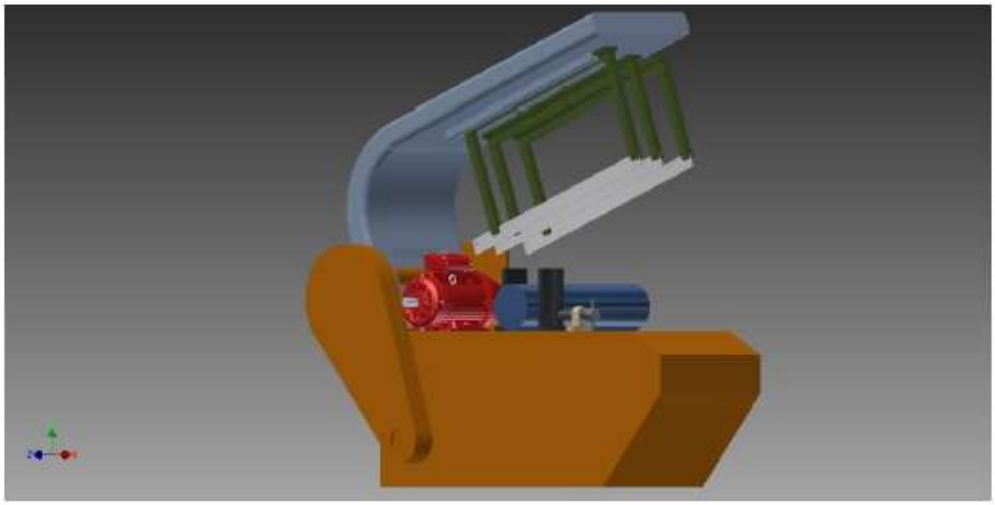

Figure 3 (A): Model of Multi Level Power Hacksaw Machine

Page 8-14 © MANTECH PUBLICATIONS 2021. All Rights Reserved

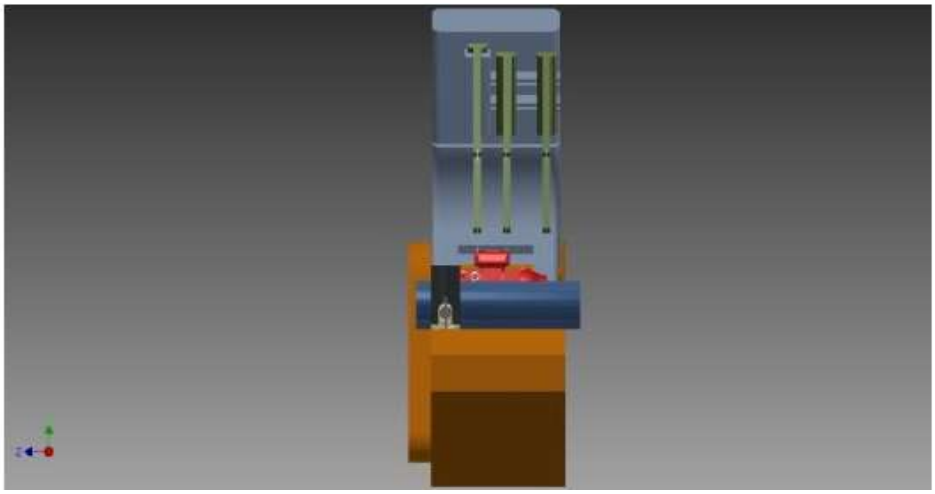

Figure 3 (B): Model of Multi Level Power Hacksaw Machine

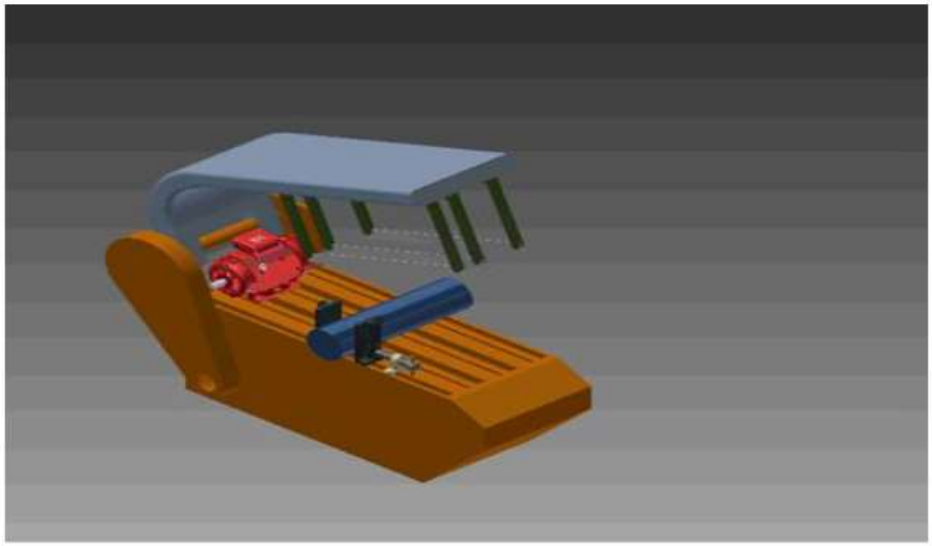

Figure 3 (C): Model of Multi Level Power Hacksaw Machine

CONCLUSION

It is realized that ordinary power hacksaw machine can be supplanted with computerized power Hacksaw machine. Robotized control hacksaw machine gives high profitability in brief timeframe in correlation with the customary power hacksaw machines. The significant favorable position of this machine is mediation of work is decreased to most extreme dimension. In this fast rising mechanical area the utilization of intensity Hacksaw machine is wide, time and work assumes a noteworthy job underway procedure. This can be overwhelmed by utilizing this kind of mechanized machines which I have proposed.

Page 8-14 © MANTECH PUBLICATIONS 2021. All Rights Reserved

REFERENCES

I. D.V.Sabariananda1, V.Siddhartha1, B.SushilKrishnana, Design and Fabrication of Automated Hacksaw Machine, volume 3, special issue 2, April 2014.

II. Muhammad Ali Mazidi, Janice GillispieMazidi, and Rolin D. McKinlay „The 8051 Micro Controller and Embedded Systems", 2nd Edition, Pearson Education Inc. 2008.

III. Standard blade sizes used in power hacksaw machines using the link http://www.planomillers.com/ - viewed on August 2, 2013.

IV. Anthony Esposito „Fluid Power with applications", 6th Edition, Pearson Education Inc. 2011.

V. Halilbil, simulation of orthogonal metal cutting by finite element analysis, august 2003

VI. VahidKalhori, Modeling & Simulation of Mechanical Cutting, 2001:28. ISSN 1402-1544

VII. Cecil Reid Attaway, Am analysis of the orthogonal metal cutting process, December, 1968

VIII. David Gordon Wilson "UNDERSTANDING PEDAL POWER" ISBN: 0-86619-268 9 [C] 1986, Volunteers in Technical Assistance" Technical paper 51 VITA 1600 Wilson Boulevard USA.

IX. Zoebkhan,"Design and Fabrication of Human Powered Wood Cutting machine", International Journal on Recent and Innovation Trends in Computing and Communication ISSN: 2321-8169 Volume: 3 Issue: 2 072– 074.

X. KshirsagarPrashantR ,"Theoretical Analysis of Multi-Way Power Hacksaw Machine" , International Journal of Research in Advent Technology, Vol.3, No.4, April 2015 E-ISSN: 2321-9637

Page 8-14 © MANTECH PUBLICATIONS 2021. All Rights Reserved