MANTECH Publications

Journal of Product Design, Quality Engineering & Technology
Volume 4, Issue 3, September-December 2019

Experimental Investigations on DI Diesel Engine with High Grade Insulated Combustion Chamber with Varied Injection Pressure

N. Janardhan
Department of Mechanical Engineering
Chaitanya Bharathi Institute of Technology,
Gandipet, Hyderabad, Telangana State, India
Corresponding Authors' email id: *narambhatlu.datta@gmail.com*

Abstract

To evaluate the performance of diesel engine with high grade low heat rejection combustion chamber which consisting of air gap insulated piston with 3 mm air gap, with superni (an alloy of nickel) crown, air gap insulated liner with superni insert and ceramic coated cylinder head with neat diesel with varied injection pressure experiments were carried out. Performance parameters brake thermal efficiency, exhaust gas temperature, coolant load, volumetric efficiency and sound levels were determined at different values of brake mean effective pressure (BMEP) of the LHR–3 combustion chamber and compared with neat diesel operation on conventional engine (CE) at similar operating conditions. It is also found that Engine with LHR–3 combustion chamber with neat diesel operation showed deteriorated performance at manufacturer's recommended injection timing of 27o bTDC.The Injection pressure changed from 190bar to 270bar with an increment of 40bar.

Keywords: *Conservation of diesel, conventional engine, LHR combustion chamber, Performance*

ρ_a =density of air, kg/m^3

ρ_d =density of fuel, gm/cc

η_d =efficiency of dynamometer, 0.85

a= area of the orifice flow meter, m^2

BP=brake power of the engine, kW

C_d=coefficient of discharge, 0.65

Cp=specific heat of water in kJ/kg K

D=bore of the cylinder, 80 mm

d=diameter of the orifice flow meter, 20 mm

Page 155-171 © MANTECH PUBLICATIONS 2019. All Rights Reserved

DI=diesel injection
I=ammeter reading, ampere
H=difference of water level in U–tube water manometer in cm of water column
K=number of cylinders, 01
L=stroke of the engine, 110 mm

LHR-3= Insulated combustion chamber with air gap insulated piston, air gap insulated liner and ceramic coated cylinder head

m_a=mass of air inducted in engine, kg/h
m_f=mass of fuel, kg/h
m_w=mass flow rate of coolant, g/s
n=power cycles per minute, N/2,
N=speed of the engine, 1500 rpm
P_a=atmosphere pressure in mm of mercury
R=gas constant for air, 287 J/kg K
T=time taken for collecting 10 cc of fuel, second
T_a=room temperature, ^{o}C
T_I=inlet temperature of water, ^{o}C
T_o=outlet temperature of water, ^{o}C
V=voltmeter reading, volt
V_s=stroke volume, m^3
VE=Volumetric efficiency, %

INTRODUCTION

The advancement of civilization causes increase of vehicle population at speed rate and increase in usage of diesel fuel in transport and agriculture sector leading to depletion of diesel fuels. Increase in prices of diesel fuel in International market has become another burden on economic sector of India. The conservation of diesel fuel has become inevitable for the engine, users and researchers involved in the combustion research. [Matthias Lamping et al, 2008].

Dr. Diesel had made a remarkable invention of the diesel engine, as their excellent fuel efficiency and durability, became popular power plant for automotive industry. It has got global acceptance as it is used in agricultural sector, industrial applications and construction equipment and marine propulsion. [Cummins et al, 1993; Avinash Kumar Agarwal et al, 2013].

Low Heat combustion chamber concept is to reduce coolant losses by incorporating the thermal barriers in the path of heat flow to the coolant that make the gaining thermal efficiency. There are different methods to achieve this by coating the cylinder head with ceramic and maintaining the air gaps in piston and in the liner. Pistons and liners are made with low thermal conductivity materials like superni(an alloy of nickel) , cast iron and steel.

Page 155-171 © MANTECH PUBLICATIONS 2019. All Rights Reserved

Low Heat combustion(LHR) chamber were classified as low grade Low Heat Rejection Combustion chamber which is engine with ceramic coated cylinder head, medium grade Low Heat Rejection Engine which is having air gap in piston and air gap in the liner and high grade Low Heat Rejection combustion chamber which is combined arrangement of low grade and high grade.

Experiments were already carried out with engine with low grade Low Heat Rejection combustion chamber diesel engine[Paralak et al, 2005; Ekrem et al, 2006; Ciniviz et al, 2008; Janardhan et al, 2014; Janardhan et al, 2015]. They revealed that brake specific fuel consumption decreased by 3-4% in comparison with conventional engine. Tests were carried out by keeping the air gap in piston[Parker et al, 1987]. However, they fixed up the crown with bolted joint, which had become a failure concept as it was not sealed air completely in the gap. It was become a successful by screwing the crown to the piston, by keeping a gasket, made of superni in between these two parts [Rammohan et al, 1999; Janardhan et al, 2015].

Experiments were conducted on high grade Low Heat Rejection engine with injection pressure at recommended injection timing to study the pollution levels of smoke and NOx levels. They came to know that drastically increased in the NOx levels. It was known clearly from literature survey that hot combustion chamber is suitable for high viscous vegetable oils.

Experiments were carried out diesel engine with high grade Low Heat Rejection combustion chamber, capacity of 3.68kw, speed 1500 rpm, compression ratio of 16:1 with varied injection timing and injection pressure[Kesava Reddy et al, 2012; Janardhan et al, 2012; Chowdary et al, 2012]. Engine with LHR–3combustion chamber improved brake thermal efficiency by 6–8% with crude vegetable oils in comparison with CE with diesel operation. Performance was further improved with an increase of injection pressure and advanced injection timing.

Experiments were carried out on same configuration of the engine with biodiesel with varied injection timing and injection pressure[[Kesava Reddy et al, 2012; Janardhan et al, 2012; Chowdary et al, 2012].It was found in improved performance.

Page 155-171 © MANTECH PUBLICATIONS 2019. All Rights Reserved

However, no systematic investigations were reported on comparative performance of the engine with LHR–3 combustion chamber with diesel with varied injection pressure.

The present paper attempted to evaluate the performance of high grade LHR combustion chamber, which consisted of air gap insulated piston, air gap insulated liner and ceramic coated cylinder head fuelled with diesel with varied injection pressure. Comparative performance studies were made on engine with LHR–3 combustion chamber with conventional engine with diesel operation.

MATERIALS AND METHODS

The physical-chemical properties of the diesel fuel are presented in Table–1.

Table.1. Properties of Diesel

Property	Units	Diesel
Carbon chain	--	C_8-C_{28}
Cetane Number		55
Density	gm/cc	0.84
Bulk modulus @ 20Mpa	Mpa	1475
Kinematic viscosity @ 40°C	cSt	2.25
Sulfur	%	0.25
Oxygen	%	0.3
Air fuel ratio (stochiometric)	--	14.86
Lower calorific value	kJ/kg	44800
Flash point (Open cup)	^{o}C	68
Molecular weight	--	226
Colour	--	Light yellow

Page 155-171 © MANTECH PUBLICATIONS 2019. All Rights Reserved

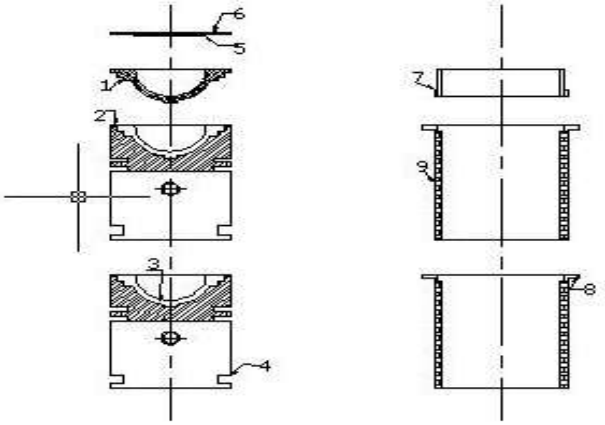

Fig.1. 1.Superni crown with threads, 2. Superni gasket, 3.Air gap in piston, 4. Body of the piston, 5. Ceramic coating on inside portion of cylinder head, 6. Cylinder head, 7. Superni insert with threads, 8. Air gap in liner and 9. Body of liner

Engine with high grade Low Heat Rejection combustion chamber (Fig.1) consists of two-part piston. The top one is crown, made with superni-90(an alloy of nickel) screwed to the aluminium body of the piston, providing a 3mm gap in between the crown and the body of the piston. The improved performance with optimum thickness found to be 3mm of the engine with diesel as fuel [8].

Fig.1. Schematic diagram of assembly high grade low heat rejection engine the insulated piston, insulated liner and ceramic coated cylinder head

The compression ratio of the engine was not altered. Insert, made with superno-90 was screwed to the top portion of the liner in such a manner that an air gap of 3-mm was maintained between the insert and the liner body. The thickness of 500 microns of partially stabilizing zirconium was coated on the inside portion of cylinder head by means of plasma arc coating. Thermal conductivities of superni-90, air and PSZ are 20.92, 0.057 and 2.01W/m-k. The experimental set up with schematic diagram with diesel fuel is shown in Fig.2. The engine specifications are shown in Table-2. The engine was connected to an electric dynamometer for measuring its brake power. The rheostat helps in loading the Dynamometer. The combustion chamber is equipped with direct type injector without any swirling type air mechanism. The fuel measurement can be done using with Burette method, burette along with fuel tank and three way valve. Air box method, Air box with orifice meter, U-tube manometer arrangement is used for measuring the air consumption.

Page 155-171 © MANTECH PUBLICATIONS 2019. All Rights Reserved

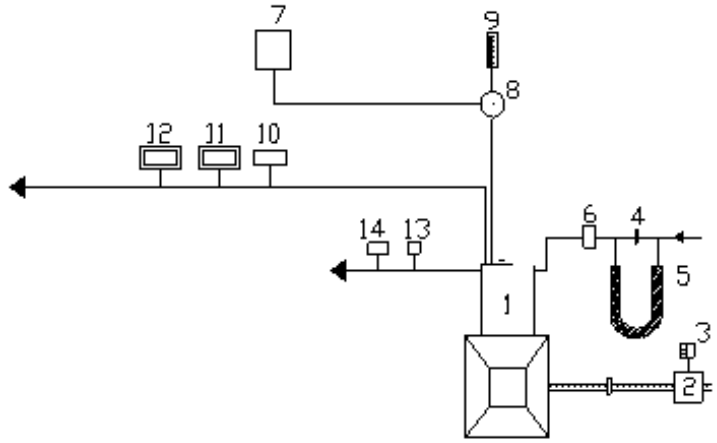

Fig.2. 1.Engine, 2.Electical Dynamo meter, 3.Load Box, 4.Orifice meter, 5.U-tube water manometer, 6.Air box, 7.Fuel tank, 8, Three way valve, 9.Burette, 10. Exhaust gas temperature indicator, 11.AVL Smoke meter, 12.Netel Chromatograph NOx Analyzer, 13.Outlet jacket water temperature indicator and 14. Outlet-jacket water flow meter.

Fig.2. Schematic diagram of experimental set–up

Table.2. Specifications of the Test Engine

Description	**Specification**
Engine make and model	Kirloskar (India) AV1
Maximum power output at a speed of 1500 rpm	3.68 kW
Number of cylinders ×cylinder position× stroke	One × Vertical position × four-stroke
Bore × stroke	80 mm × 110 mm
Method of cooling	Water cooled
Rated speed (constant)	1500 rpm
Fuel injection system	In-line and direct injection
Compression ratio	16:1
BMEP @ 1500 rpm	5.31 bar
Manufacturer's recommended injection timing and pressure	27°bTDC × 190 bar
Dynamometer	Electrical dynamometer

Page 155-171 © MANTECH PUBLICATIONS 2019. All Rights Reserved

Number of holes of injector and size	Three × 0.25 mm
Type of combustion chamber	Direct injection type
Fuel injection nozzle	Make: MICO-BOSCH No- 0431-202-120/HB
Fuel injection pump	Make: BOSCH: NO- 8085587/1

Water- cooling system in a naturally aspirated way was used to cool the engine and maintained at 80^0C by adjusting the water flow rate. Pressure feed lubrication system adopted for lubricating the parts. Thermocouples made of iron and iron-constantan attached to the exhaust gas temperature indicator for measuring exhaust gas temperature (EGT) and coolant water outlet jacket temperature indicator for measuring outlet water temperature. Copper shims of suitable size were provided for adjusting injection time.

Nozzle testing device was used for changing the injector pressure at an increment of 40 bar starting pressure from 190 bar.

Operating Conditions

Fuel used in experiment was neat diesel. Various injector pressures attempted in the investigations were 190,240 and 270 bar.

Definitions of used values:

$m_f = \frac{10 \times \rho_d \times 3600}{t \times 1000}$ —equation (1)

$BP = \frac{V \times I}{\eta_d \times 1000}$ equation (2)

$BTE = \frac{BP \times 3600}{m_f \times CV}$ equation (3)

$BP = \frac{BMEP \times 10^5 \times L \times A \times n \times k}{60000}$ ---equation (4)

$CL = m_w \times c_p \times (T_o - T_i)$ equation (5)

RESULTS AND DICUSSION

Performance Parameters

Fig.3. Shows the variation of peak Brake Thermal Efficiency (BTE) in conventional engine and engine with LHR3 combustion chamber at recommended injection timing 270bTDC and different injector pressure190, 230 and 270bar. It was found that peak BTE is very much high in conventional engine at 270 bar .It is due to increase in volumetric efficiency and increase of oxygen molecules increases the BTE. BTE was found very low in engine with LHR3 combustion chamber. Due increase in high grade insulation, very hot condition exists in combustion chamber which leads to decrease ignition

Page 155-171 © MANTECH PUBLICATIONS 2019. All Rights Reserved

delay, decreased BTE. Brake Thermal Efficiency (BTE) was found to be more in conventional engine at all different injector pressures when compared with engine with LHR3 combustion chamber. It was found that engine with LHR3 combustion chamber at recommended 270bTDC at 190bar decreased BTE 3.57% when compared with conventional engine with the same injection time and pressure. Same percentage reduction was found with LHR3 at 230bar and 270bar when compared with conventional engine. Due to the reduction of ignition delay of the fuel as the combustion chamber exists in hot condition.

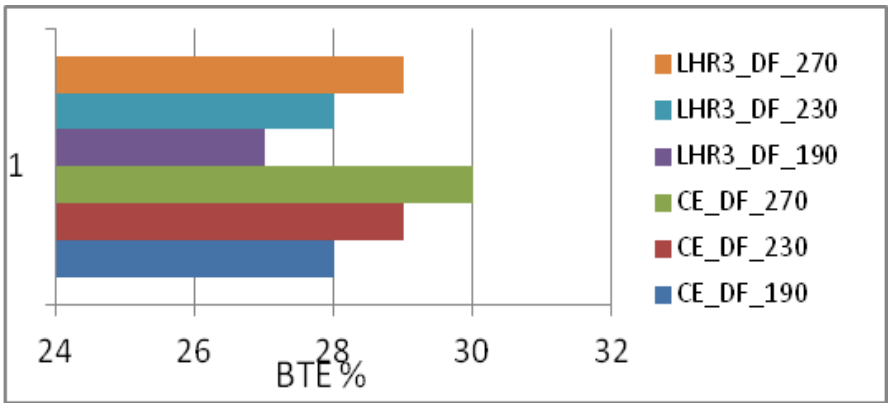

Fig.3 Variation peak Brake Thermal Efficiency at recommended injection timing of 270bTDC with conventional engine and engine with high grade Low Heat Combustion chamber at different injector pressures of 190,230 and 270bar on bar chart.

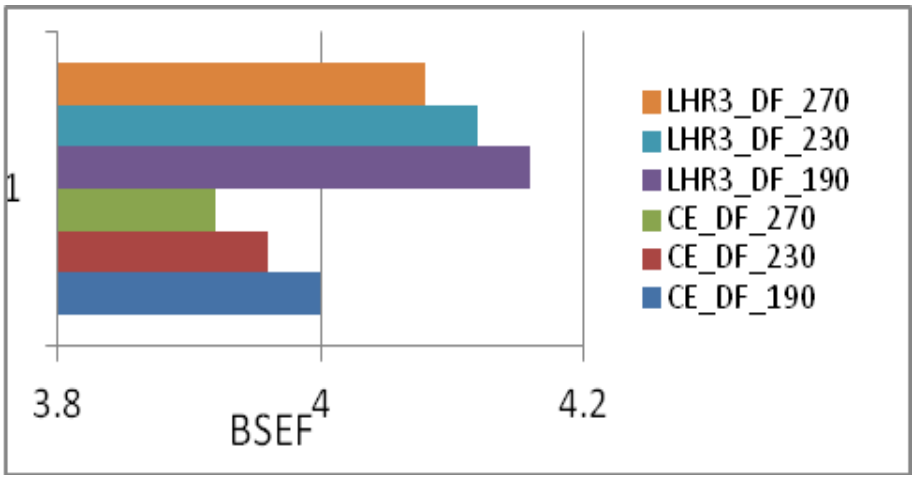

Fig.4 Variation peak Brake Energy Consumption at recommended injection timing of 270bTDC with conventional engine and engine with high grade Low Heat Combustion chamber at different injector pressures of 190,230 and 270bar on bar chart.

Page 155-171 © MANTECH PUBLICATIONS 2019. All Rights Reserved

Fig.4.Shows the variation of peak Brake Specific Energy Consumption (BSEC) at recommended injection timing 270bTDC at all different injector pressures in conventional engine and engine with LHR3 combustion chamber. The Brake specific Energy Consumption (BSEC) is the important when comparing the performance of different test fuels on the same engine.

Engine with LHR3 with diesel fuel at recommended time at 190bar shows deteriorate performance when compared with conventional engine with same configuration.

Increase in 4% of Brake Specific Energy Consumption with engine with LHR3 combustion chamber at 27bTDC with 190 bar of injector pressure when compared with conventional engine with same configuration. Same thing was found with an injector pressure of 230 and 270bar. High value of BSEC indicates lower performance of the engine

Fig.5.Shows the variation of peak Exhaust Gas Temperature(EGT) at recommended injection timing 270bTDC at all different injector pressures in conventional engine and engine with LHR3 combustion chamber. The exhaust gas temperature was found more in engine with low heat rejection when compared with conventional engine at different injector pressures. This is due to the decrease in ignition delay and more insulation causes most of the heat leaves out through the exhaust gas.

As the injector pressure increases from 190 to 270bar, decrease in temperature was found in both conventional and engine with LHR3 combustion chamber. This is due the conversion of fuel energy into useful work. Exhaust gas temperature 4% more in engine with LHR3 combustion chamber at recommended injection time 270bTDC and injector pressure of 190bar when compared with conventional engine with same configuration.

Same configuration of LHR3 combustion chamber with injector pressure of 230 bar it was found 15% more exhaust gas temperature when compared with conventional engine. It was found 14% more exhaust gas temperature with same configuration of LHR3 combustion chamber with injector pressure of 270bar when compared with conventional engine.

Page 155-171 © MANTECH PUBLICATIONS 2019. All Rights Reserved

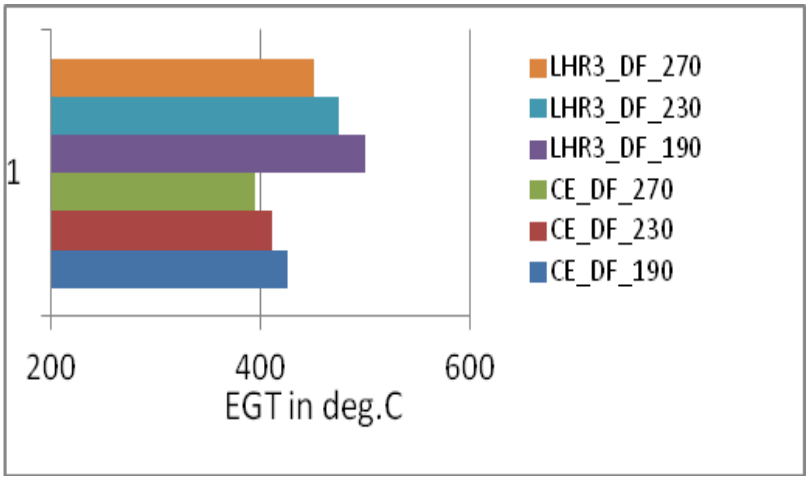

Fig.5 Variation peak Exhaust gas temperature at recommended injection timing of 270bTDC with conventional engine and engine with high grade Low Heat Combustion chamber at different injector pressures of 190,230 and 270bar on bar chart.

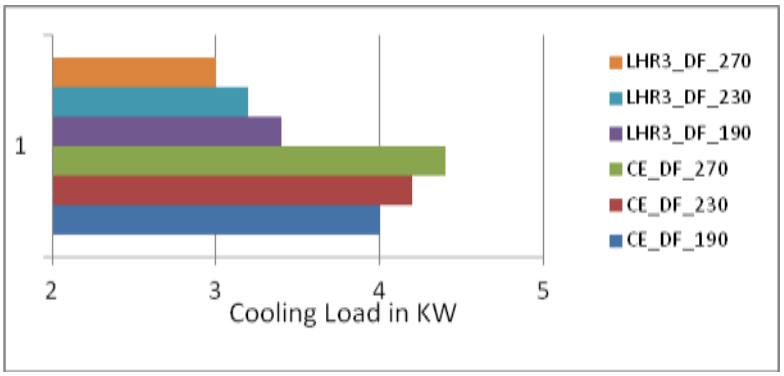

Fig.6 Variation peak coolant load at recommended injection timing of 27^0bTDC with conventional engine and engine with high grade Low Heat Combustion chamber at different injector pressures of 190,230 and 270bar on bar chart.

Fig.6.Shows the variation of peak Cooling Load (CL) at recommended injection timing 270bTDC at all different injector pressures in conventional engine and engine with LHR3 combustion chamber. Coolant load is more in conventional engine when compared to LHR3 engine as increasing the pressure from 190 to 270bar.This is due to the more insulation in LHR3 engine. In case of conventional engine as increasing the pressure, coolant load is increases. This is to the due to the more conversion of fuel energy into useful work. In case of engine with LHR3 combustion chamber, increasing injector pressure decreases the coolant load. It was due to high grade insulation.

Fig.7.Shows the variation of peak Cooling Load (CL) at recommended injection

Page 155-171 © MANTECH PUBLICATIONS 2019. All Rights Reserved

timing 270bTDC at all different injector pressures in conventional engine and engine with LHR3 combustion chamber. As we increasing the injector opening pressure, fuel energy conversion into work done is more. In case of engine with LHR3 combustion chamber due to the decreasing the ignition delay, even before the piston reaches the TDC, combustion will be commenced, sound levels are more. Sound levels are comparable when conventional engine with injector pressure of 190 bar and engine with LHR3 combustion chamber with injector pressure of 270bar.

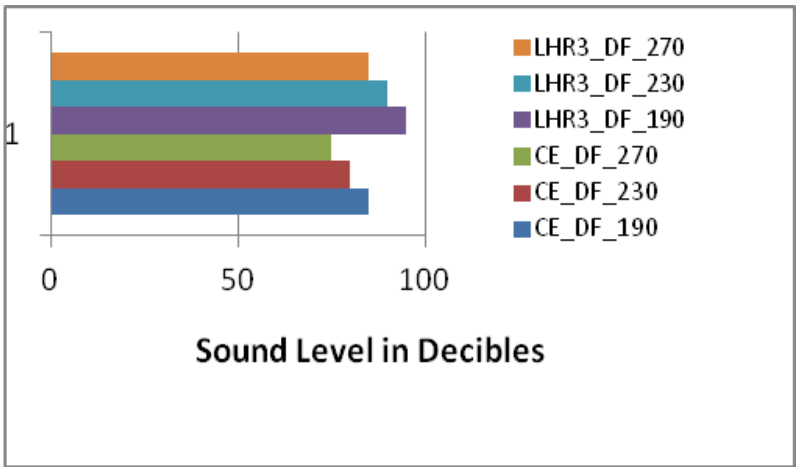

Fig.7. Variation Sound level at recommended injection timing of 270bTDC with conventional engine and engine with high grade Low Heat Combustion chamber at different injector pressures of 190,230 and 270bar on bar chart.

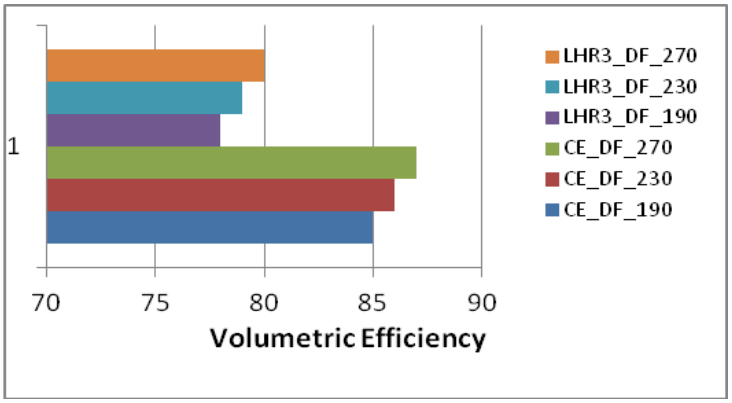

Fig.8 Variation Volumetric efficiency at recommended injection timing of 270bTDC with conventional engine and engine with high grade Low Heat Combustion chamber at different injector pressures of 190,230 and 270bar on bar chart.

Page 155-171 © MANTECH PUBLICATIONS 2019. All Rights Reserved

Fig.8.shows the variation of peak Volumetric efficiency on bar chart at different injector pressures at 190bar, 230bar and 270bar.The volumetric efficiency was found increased when we increase the injector opening pressure from 190bar to 270bar with an increment of 40bar pressure, both in conventional and engine with LHR3 combustion chamber. It is due to the more amount of air inducted causes increase in fuel conversion efficiency.

In case of engine with LHR3 combustion chamber, because of the hot condition exists density of air decreases which decreases the volumetric efficiency. Volumetric efficiency in engine with LHR3 combustion chamber at recommended injection time at 190bar was found decreased 8% when compared with conventional engine with same configuration.

Volumetric efficiency is very much high in conventional engine at 270bar. It was due to the high fuel conversion efficiency as more amount of air inducted with reasonable ignition delay. Volumetric efficiency is very low in engine with LHR3 combustion chamber at 190bar. It was due to high insulation and decrease in ignition delay.

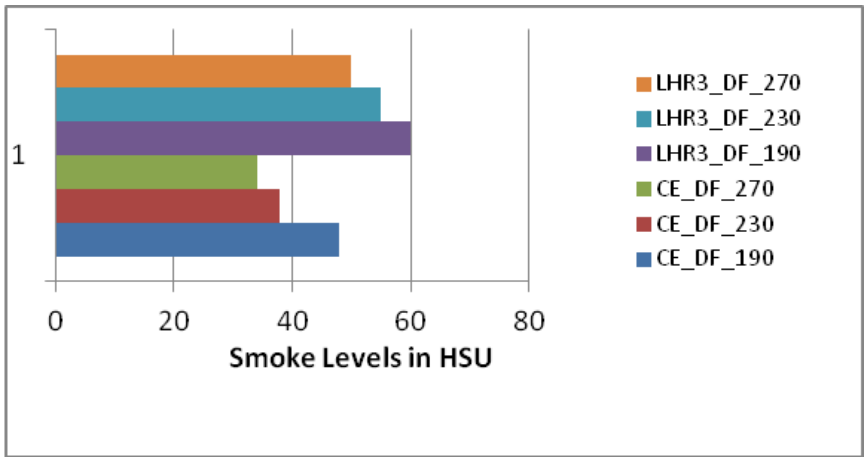

Fig.9. Variation peak smoke level at recommended injection timing of 270bTDC with conventional engine and engine with high grade Low Heat Combustion chamber at different injector pressures of 190,230 and 270bar on bar chart.

Page 155-171 © MANTECH PUBLICATIONS 2019. All Rights Reserved

Fig.10. Shows the variation of peak NOx levels in conventional engine and engine with LHR3 combustion chamber at recommended injection at different injector pressures of 190bar,230bar and 270bar. Nitrogen oxides(NOx) are more in engine with LHR3 combustion chamber at all injector pressures when compared with Conventional engine. It was due to the high insulation is provided in the engine with LHR3 combustion chamber which provides high temperature is available in the engine which increases the NOx formation. NOx levels are increases when increasing the injector pressures from 190bar to 230bar,230bar to 270bar in both versions of the engine. It is due to the increasing volumetric efficiency causes the increasing fuel energy conversion to work done leads to increasing the temperature.

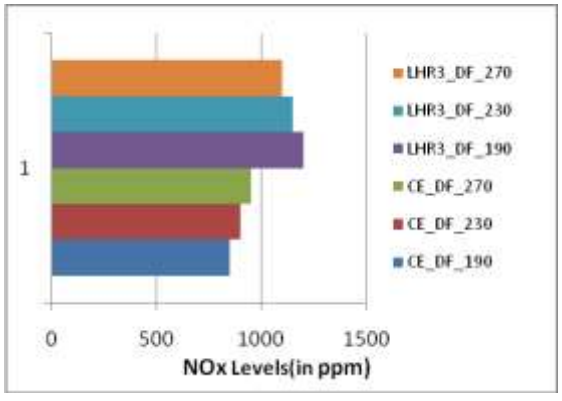

Fig.10. Variation peak NOx levels at recommended injection timing of 270bTDC with conventional engine and engine with high grade Low Heat Combustion chamber at different injector pressures of 190,230 and 270bar on bar chart.

CONCLUSIONS

1. Engine with LHR–3 combustion chamber showed deteriorate performance at the full load operation in terms of brake thermal efficiency, exhaust gas temperature, volumetric efficiency and sound levels at 27 o bTDC in comparison with conventional engine at 27 o bTDC at the same injector pressure of 190bar.

2. Engine with LHR–3 combustion chamber at 27o bTDC, increased brake thermal efficiency by 11%,at full load–decreased BSFC by 10%, increased exhaust gas temperature by 5%, decreased coolant load by 5%, decreased volumetric efficiency by 1%and increased sound levels by 6% in comparison with same configuration of conventional engine at an injection timing of 27 o bTDC at 190bar.

Research Findings and Suggestions

Study the performance parameters with direct injection diesel engine with LHR–2 combustion chamber and conventional combustion chamber were determined at

Page 155-171 © MANTECH PUBLICATIONS 2019. All Rights Reserved

varied injectorpressure at optimum injection timing with neat diesel operation.

Future Scope of Work

Hence further work on the effect of injector opening on pressure with engine with LHR–3 combustion chamber with diesel operation is necessary at optimum injection timing.

ACKNOWLEDGMENTS

Authors thank authorities of Chaitanya Bharathi Institute of Technology, Hyderabad for providing facilities for carrying out this research work. Financial assistance provided by All India Council for Technical Education (AICTE), New Delhi, is greatly acknowledged.

REFERENCES

I. Matthias Lamping, Thomas Körfer, Thorsten Schnorbus, Stefan Pischinger, Yunji Chen : Tomorrows Diesel Fuel Diversity – Challenges and Solutions, SAE 2008-01—1731

II. Cummins, C. and Jr. Lyle Diesel's Engine, Volume 1: From Conception To 1918". Wilsonville, OR, USA: Carnot Press, ISBN 978-0-917308-03-1, 1993.

III. Avinash Kumar Agarwal,Dhananjay Kumar Srivastava , AtulDhar, Rakesh Kumar Maurya,

IV. Pravesh Chandra Shukla, AkhilendraPratap Singh.(2013), Effect of fuel injection timing and pressure on combustion, emissions and performance characteristics of a single cylinder diesel engine, Fuel, 111, pp 374–383.

V. Parlak, A., Yasar, H., ldogan O. (2005).The effect of thermal barrier coating on a turbocharged Diesel engine performance and exergy potential of the exhaust gas. Energy Conversion and Management, ISSN: 0196-8904, 46(3), 489–499.

VI. Ekrem, B., Tahsin, E., Muhammet, C. (2006). Effects of thermal barrier coating on gas emissions and performance of a LHR engine with different injection timings and valve adjustments. Journal of Energy Conversion and Management, ISSN: 0196-8904, 47,1298-1310.

Page 155-171 © MANTECH PUBLICATIONS 2019. All Rights Reserved

VII. Ciniviz, M., Hasimoglu, C., Sahin, F., Salman, M. S. (2008). Impact of thermal barrier coating application on the performance and emissions of a turbocharged diesel engine. Proceedings of The Institution of Mechanical Engineers Part D-Journal Of Automobile Eng,222 (D12), ISSN: : 0954-4070, 2447–2455.

VIII. Janardhan, N., Murali Krishna, M.V.S., Kesava Reddy, Ch. and DurgaPrasada Rao. N. (2014).Effect of injection timing on performance parameters of DI diesel engine with ceramic coated cylinder head, International Journal of Scientific and Engineering Research, 5(12),1596–1607.

IX. N. Janardhan, M.V.S. Murali Krishna, Ch.Kesava Reddy and N.DurgaPrasada Rao. (2015), Effect of injection timing on exhaust emissions and combustion characteristics of direct injection diesel engine with ceramic coated cylinder head, International Journal of Current Engineering Technology, February, 5(1),46–52.

X. Parker, D.A. and Dennison, G.M. (1987). The development of an air gap insulated piston. SAE Paper No. 870652, 1987.

XI. Rama Mohan, K., Vara Prasad, C.M., Murali Krishna, M.V.S. (1999). Performance of a low heat rejection diesel engine with air gap insulated piston, ASME Journal of Engineering for Gas Turbines and Power,121(3),530-540.

XII. Janardhan, N., Murali Krishna, M.V.S., Kesava Reddy, Ch. and DurgaPrasada Rao, (2015).Effect of injection timing on performance parameters of DI diesel engine with air gap insulation, International Journal of Thermal Technologies, 5(1),9–17.

XIII. Janardhan, N., Murali Krishna, M.V.S., Kesava Reddy, Ch. and DurgaPrasada Rao, N. (2014),Effect of injection timing on exhaust emissions and combustion characteristics of direct injection diesel engine with high grade insulated combustion chamber, International Journal of Application or Innovation in

Page 155-171 © MANTECH PUBLICATIONS 2019. All Rights Reserved

Engineering and Management, 3(12), 213–221.

XIV. Kesava Reddy, Ch., Murali Krishna, M.V.S., Murthy, P.V.K. and Ratna Reddy, T.(2012) Performance evaluation of a high grade low heat rejection diesel engine with crude pongamia oil.International Journal of Engineering Research and Applications, 2(5), pp 1505-1516.

XV. Janardhan, N., Murali Krishna, M.V.S., Ushasri, P. and Murthy, P.V.K. (2012)., Performance of a low heat rejection diesel engine with jatropha, . International Journal of Engineering Inventions, 1(2), 23–35.

XVI. Chowdary, R.P., Murali Krishna, M.V.S., Reddy, T.K.K. andMurthy,P.V.K. (2012). Performance evaluation of a high grade low heat rejection diesel engine with waste fried vegetable oil. International Journal of Engg& Technology, 2(3), pp 440-450

XVII. 17. Krishna Murthy, P.V. (2010). Studies on biodiesel with low heat rejection diesel engine. PhD Thesis, J. N. T. University, Hyderabad, India.

XVIII. Venkateswara Rao, N., Murali Krishna, M.V.S. and Murthy, P.V.K. (2013). Effect of injector opening pressure and injection timing on performance parameters of high grade low heat rejection diesel engine with tobacco seed oil based biodiesel. International Journal of Current Engineering & Technology, 3(4),pp 1401-1411.

XIX. Subba Rao, B., Ramjee, E., Murthy, P.V.K. and Murali Krishna, M.V.S. (2013). Studies on exhaust emissions and combustion characteristics of tobacco seed oil in crude form and biodiesel from a high grade low heat rejection diesel engine. International Journal of Industrial Engineering and Technology, 3(1), pp 27-36.

XX. Murali Krishna, M.V.S., Janardhan, N., Murthy, P.V.K., Ushasri, P. and Nagasarada. (2012). A comparative study of the performance of a low heat rejection diesel engine with three different levels of insulation with

Page 155-171 © MANTECH PUBLICATIONS 2019. All Rights Reserved

vegetable oil operation. Archive of Mechanical Engineering (Poland), LIX (1), pp 101-128.

XXI. Kesava Reddy, Ch., Murali Krishna, M.V.S., Murthy, P.V.K. and Ratna Reddy, T. (2012).A comparative study of the performance evaluation of a low heat rejection engine with three different levels of insulation with crude pongamia oil operation.Canadian Journal on Mechanical Sciences & Engineering, 3(3), pp 59-71.

XXII. Murali Krishna, M.V.S., Chowdary, R.P., Reddy, T.K.K. and Murthy, P.V.K. (2012). A comparative study of the performance of a low heat rejection diesel engine with three different levels of insulation with waste fried vegetable oil operation. International Journal of Science & Technology (Australia), 2(6),pp 358-371.

XXIII. Ratna Reddy, T., Murali Krishna, M.V.S., Kesava Reddy, Ch. and Murthy, P.V.K. (2012). Comparative performance of different versions of the low heat rejection diesel engine with mohr oil based bio-diesel. International Journal of Research & Reviews in Applied Sciences, 1(1), pp 73-87.

Page 155-171 © MANTECH PUBLICATIONS 2019. All Rights Reserved