MANTECH Publications

Journal of Product Design, Quality Engineering & Technology
Volume 4, Issue 2, May-August 2019

ATmega8L Controlled Automatic Shirodhara Unit

Pradnya N. Gokhale
Assistant Professor
MPCOE
University of Mumbai
Corresponding author's email id: *gokhaleprad@gmail.com*

Abstract

In this paper, implemented design of the Shirodhara unit using application of ATMEL8 is explained. The main objective of the project is to create accuracy in the traditional Shirodhara method which cures the mental stress and gives immediate feeling of relaxing effect.

Keywords: *Shirodhara, Sensors, Heater, Microcontroller*

INTRODUCTION



Fig 1.Shirodhara treatment

Shirodhara is an Ayurvedic treatment in which warm heated liquid introduced in a container is poured over the forehead gently in an oscillation manner for about 30-35 min and allowing the oil to run through the scalp and into the hair. A massage is given to the patient head. [6]

The liquids used in Shirodhara depend on what is being treated, but can include oil, milk, buttermilk, coconut water, or even plain water. It helps to cure allergic rhinitis issues sinusitis, neurological disorders etc. [7]. This manual process is designed to work automatically which regulates the flow of liquid, maintain temperature, therapists are completely free to other important work; the oil is recollected again and

Page 102-110 © MANTECH PUBLICATIONS 2019. All Rights Reserved

filtered out automatically. All these manual procedure are controlled by microcontroller ATMEL8.

REVIEW OF EARLIER WORK

In 300 BC, Acharya chakra have introduced Ayurvedic treatment shirodhara.

Since1920s, practice of shirodhara have been carried out by vaidyas (practitioners of Ayurveda) in Kerala, India.

In 2003 Patel Dhananjay V, Role of Manasika bhava in the etiopathogenesis of Uccha Raktachapa and its management with Medhya Rasayana and Shirodhara, he found that Regular shirodhara enhances blood circulation to the brain, improves memory, nourishes hair and scalp, assists in providing sound sleep and calms the body and mind sound sleep and calms the body and mind.[2]

In 2006 Ravindra Kumar Arahunasi did critical analysis of Essential hypertension with an Ayurvedic perspective through Takra Dhara and Gugguladi Yoga, A.M.V Hubli, RGUHS, Bangalore. Thus Shirodhara is one of the most effective treatments for reducing stress and nervous tension. [1]

MATERIALS AND METHODS

In this method, as the patient lies on the table its presence is sensed by the IR sensor and this signal is passed to the microcontroller Atmega8 which is heart of the system. **See Figure 2**

It controls and monitor over all procedure of the system. It receives the signal from IR sensor circuit and on the DC gear motor.

DC gear motor is driven through motor driver IC L293D. It allows linear motion of the vessel placed above the patient's head just 5 fingers above it and oil flow starts through pump from container to the vessel.

Container have heater which is resistive type used for heating the oil in it. Four to five resistive heaters are connected across the assembly of container. It heats the oil up to the set temperature desired for Shirodhara treatment or just 1 or 2° C greater than patient temperatures. For this purpose temperature sensor LM35 is used to measure the temperature of patient and it is displayed on the LCD.

Page 102-110 © MANTECH PUBLICATIONS 2019. All Rights Reserved

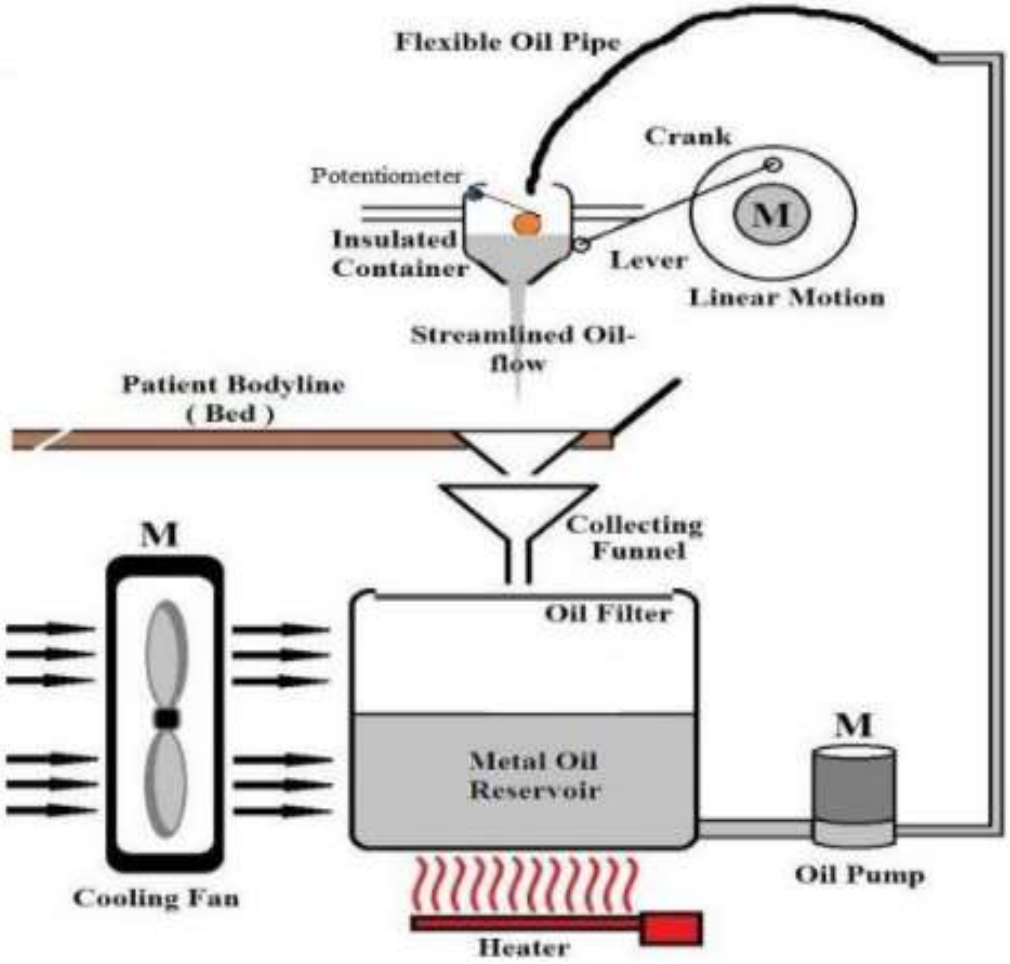

Fig.2. Working Principles

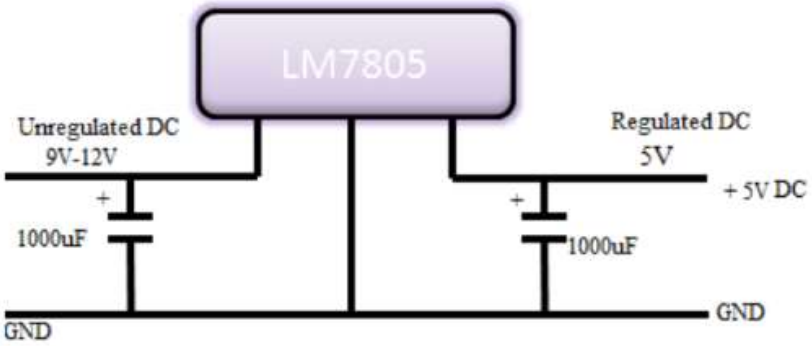

Fig 3: Regulated power supply section

Page 102-110 © MANTECH PUBLICATIONS 2019. All Rights Reserved

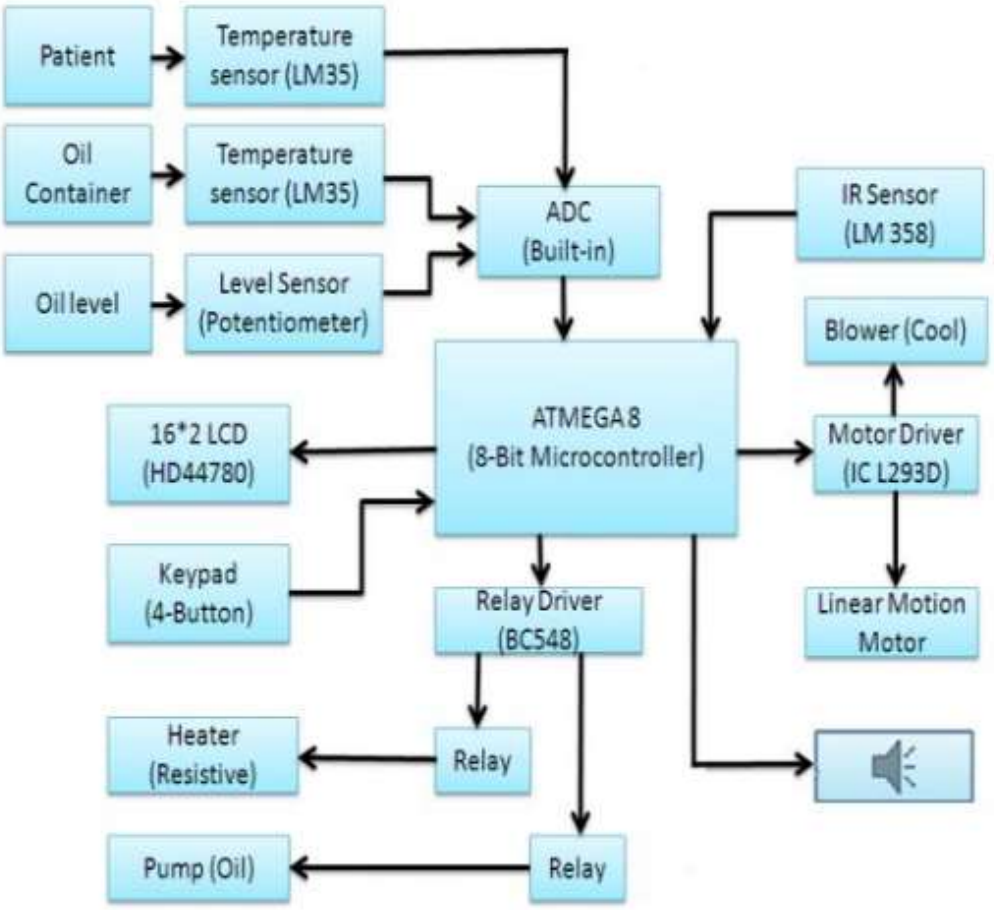

Fig.4. System design

One more temperature sensor LM35 is used to measure the temperature of oil container, if it goes above the value set by the user then controller of the heater and turns on the blower i.e. cooling fan, which lowers the temperature of oil by cooling it. Outputs of both temperature sensor are in analog form, thus this are applied to the ADC which is inbuilt in the controller IC. All this heater, blower and pump are driven individually by relay. Relay driver IC BC548 drives various functions heating, cooling and pumping microcontroller Atmega8 has inbuilt 10bit ADC which converts each analog input into digital data at its output for processing purpose. Other input to the ADC comes from level sensor.

Level measurement in the system also has considerable importance.

Oil level in the tank is measured using level sensor i.e. potention meter. Potentiometer's end is connected to the shaft. On the other end of the shaft have a plastic air filled ball, immersed in the oil. As the level of the oil falls down in

Page 102-110 © MANTECH PUBLICATIONS 2019. All Rights Reserved

the tank the ball rotates the pot's knob, the change in the resistance is detected by the controller and it alarms when tank is about to empty to refill it again.

Filter is placed in the collecting vessel which collects the utilized oil and it cleans it and passes to tank. The overall procedure of treatment last for 20-30 minutes as prescribed by the therapist. Once the patient gets up the IR sensor detects no signal and thus controller switches off the pumping of oil to the vessel.

DETAILS OF VARIOUS MEASURANDS ARE

Oil/Patient temperature measurement:

It senses the body temperature and oil temperature. For measurement of oil temperature, temperature sensor LM35 is used. It is a sensor which converts physical quantity into dc voltages which is in analog form. The output voltage depends on the temperature of oil/patient. Both temperature of oil and patient are displayed on the 16×2 LCD screen.

Oil level measurement:

Level sensor is used for this purpose. As the resistance of potentiometer varies the level of oil in tank is measured.

Relays Three relays are used or switching purpose for various applications such as heating, cooling and pumping.

Relay Driver IC

Relay driver IC BC548 is used to drive all these relays.

Microcontroller IC

Microcontroller Atmega8L is the processing unit for various parameters having 8bits. It receives signal from IR sensor circuit, keypad and it gives output signal to Relay driver IC, DC motor motion, and on the buzzer.[9]

DC Geared Motor

It provides translation motion of the vessel.L293D is the motor driver IC used in the motor driver circuit.

IR Sensor

It senses the presence of the patient and sends the signals to the microcontroller to drive the Relay driver IC BC548.

Heater

It is resistive type heater 3 to 4 resistive type heaters are used across the container to heat the oil.

Page 102-110 © MANTECH PUBLICATIONS 2019. All Rights Reserved

Blower

Atypical fan is used as a blower to cool the heated oil in the tank.

Pump

Oil from the tank is pumped through the plastic tube to the vessel which requires 230 volts. Plastics tubes are used to connect the pump at inlet and outlet.

CIRCUIT DESIGN: INFRARED SENSOR CIRCUIT

Infrared sensor circuit is as shown above. It is used for detection of presence of patient. IR sensor circuit is basically made up of the IR LED and photo diodes. It consists of IR transmitter, receiver &LM358. LM358 is a dual comparator IC. It uses 3pin variable resistance pot of10K.

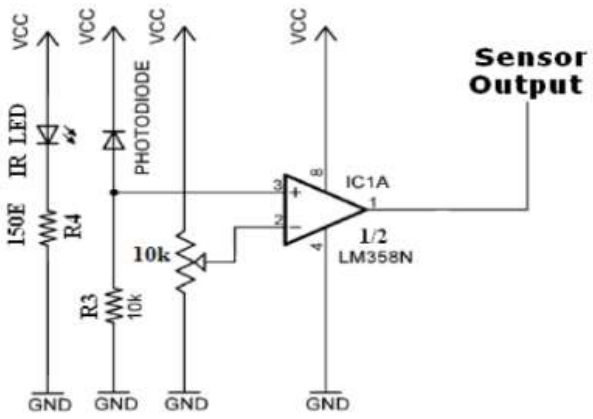

Fig.5.IR sensor circuit

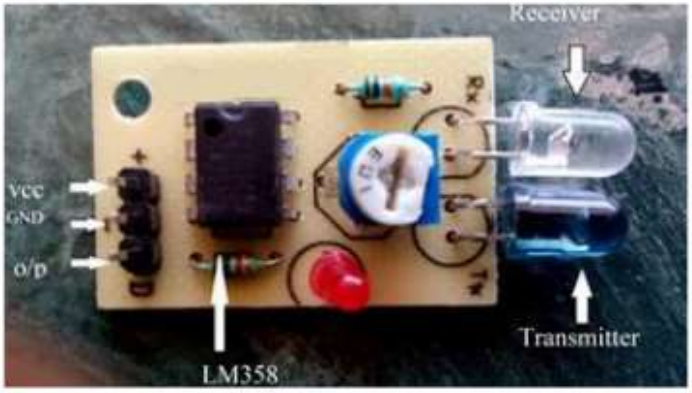

Fig.6. IR Sensor Circuit

Page 102-110 © MANTECH PUBLICATIONS 2019. All Rights Reserved

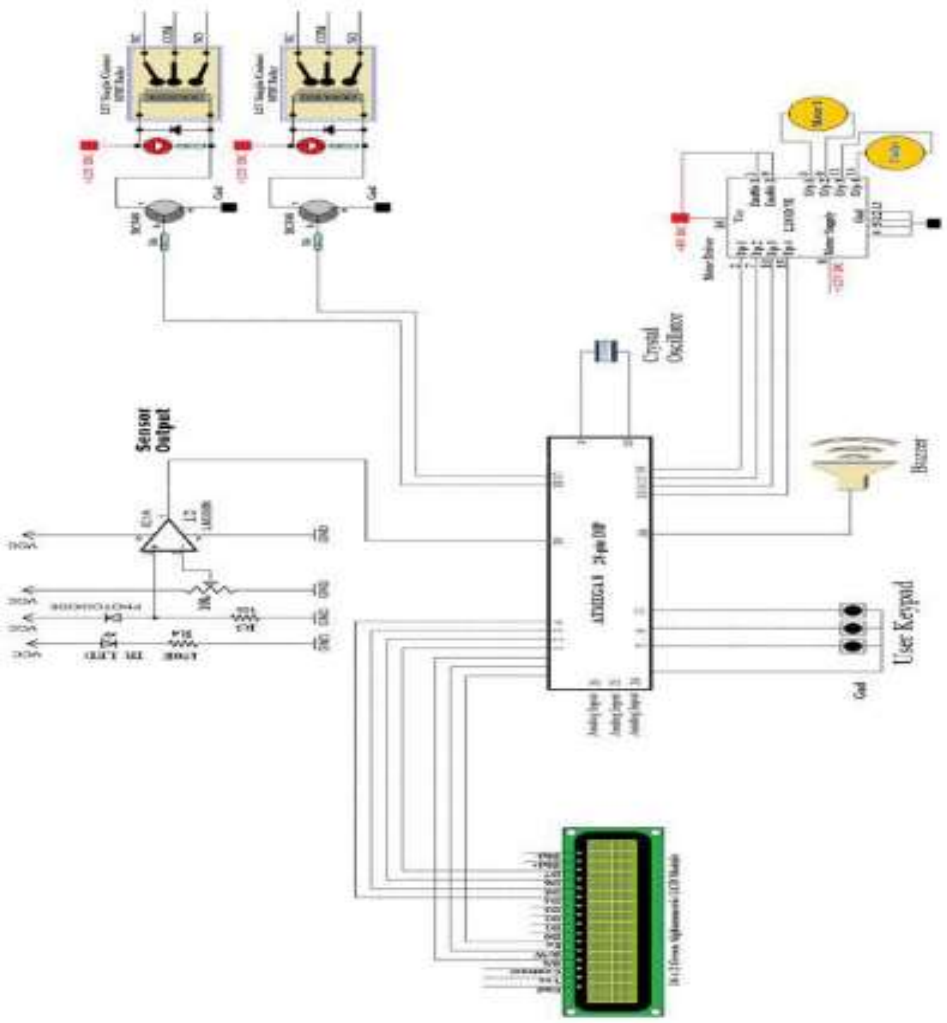

Fig. 7.Complete Circuit design

Above figure6 shows the single IR LED and photodiode sensor. It uses 3mm Red LED for data output indication. Potentiometers are used to vary the range of the detection line. Power supply of 5 volt is sufficient for the circuit. Output of the circuit is in analog form which is given to the microcontroller. Thus final circuit design as shown in figure.7 forms complete automatic control of Shirodhara model. Above Complete model diagram of the system is shown consists of:

- Oil temperature measurement
- Linear motion motor
- Relay driver circuit
- IR sensor circuit
- Microcontroller Atmega8
- User keypad
- Display device

Page 102-110 © MANTECH PUBLICATIONS 2019. All Rights Reserved

RESULTS AND CONCLUSION

Through this design, we obtain a continuous flow of warm oil from container to the vessel. With the use of DC motor we have a linear motion of vessel, which provides oil flow on patient forehead automatically. Results obtained from this machine are tested and resulted as below:

Table1: Process results

TREATMENT	OIL TYPE	DURATION OF TREATMENT	OIL REQUIRED
Scalp psoriasis	Buttermilk with must churn	Min 30 min Max 60 min	1 liter (Temp 25° C to 40° Cappro.)
Mental stress relaxation	Amla blended with coconut oil	As per required	1 to 2 liter (Temp 25° C to 40° Cappro.)
Dandruff with hair fall	Blended sesame oil	Min 30 min Max 60 min	1& half liter (Temp 25° C to 40° Cappro.)

ADVANTAGES OF THIS MODEL

- Reduces labor work
- Flow continuity.
- Maintain constant oil temperature.
- Same oil can be reused and filtered. It is safe and easy to use.
- Easy maintenance and portable
- Low power consumption

CLINICAL APPLICATIONS

Regular shirodhara enhances blood circulation to the brain, improves memory, nourishes hair and scalp, assists in providing sound sleep and calms the body and mind. Shirodhara is one of the most effective treatments for reducing stress and nervous tension.

- Ultimate mental and emotional relaxation therapy
- Beneficial for many diseases connected with the head, neck, eyes, ears, nose and throat
- Beneficial for many diseases of the nervous system like nerve disorders, facial palsy, paralysis and ptosis (drooping) of the eyelids.
- Prevents hair lose, premature graying and cracking of hair
- Relieves headache and burning sensation of the head
- Stimulates the nervous system giving sturdiness to the body
- Improves digestion
- Cools the body and relieves pain.

Page 102-110 © MANTECH PUBLICATIONS 2019. All Rights Reserved

- Invigorates the body and mind and stimulate cognitive memories
- Helps relieve fatigue, tension, anxiety, anger, chronic headaches, rheumatism, hypertension, asthma, hair problems and stress
- Disperses negative electrical impulses that accumulate at the skull and hairline

CONCLUSION

Thus, ADVANCED SHIRODHARA MACHINE recovers all the disadvantage of the manual procedure as it regulates constant oil temperature, recollects the used oil, heats it, pumps the oil in the vessel, and oscillates the vessel.

FUTURE SCOPE

With the help of this shirodhara machine we can also allow certain important physiological parameter detection such as blood pressure, pulse oximeter, heart rate monitoring. These will help therapist to be more concern with patient's care. Not only shirodhara treatment but certain types of Ayurvedic treatment can be performed by using this equipment.

REFERENCES

I. Uebaba K., Int. Res. '[Toyama, Japan, (2005). IEEE paper on "Using a healing robot for the scientific study of Shirodhara", Engineering in Medicine and Biology Magazine, IEEE (Volume: 24, Issue: 2)

II. Lavekar, G.S. Practical Handbook of Panchakarma

III. Handbook of Human Anatomy And Physiology, Ross and Wilson

IV. Muhammad Ali Mazidi, AVR Microcontroller and Embedded System, Pearson Education.

V. www.rguhs.ac.in/cdc/onlinecdc/uploads/03_A006_23460 .doc

VI. en.wikipedia.org/wiki/Shirodhara ayurvedaforyou.com/panchakarma/shirodhara.html

VII. en.wikipedia.org/wiki/Ayurveda

VIII. www.rguhs.ac.in/cdc/onlinecdc/uploads/03_A012_42184 .doc

IX. www.alldatasheet.com/Atmega8L.

Page 102-110 © MANTECH PUBLICATIONS 2019. All Rights Reserved