MANTECH Publications

Journal of Research in Electrical Circuits and Systems
Volume 2 Issue 1, January-April 2017

Design and Implementation of Fencing Circuit Using GSM for Agriculture

Diksha R. Bhil

Department of Electronics & Tele- Communication Engineering

Corresponding Author: *bhildiksha@gmail.com*

Abstract

Electric fences can be used to protect farmhouses, farmlands, forest bungalows, etc from animals. In a way, these simulate the job of a cowboy or forest guard. Already popular in countries where manpower is expensive, electric fences are slowly becoming popular in India as well. These control the animals by giving them a short, sharp but safe shock that teaches them to stay away from the fence. Thus electric fences are economical and practical solutions to maximize field production through controlled grazing. Electric fencing is safe, as its output is discrete (not continuous). There is certain time duration between two pulses that prevents prolonged shocking to animals or people. In addition, the short 'on'-time (normally 1/5000th of a second) prevents heat build-up.

Keywords: *GSM, PIR Sensor, LCD display.*

INTRODUCTION

In the world, the economy of many countries is dependent upon agriculture. In spite of economic development agriculture is the backbone of the economy. Agriculture is the main stay of economy. It contributes to the gross domestic product. Agriculture meets food requirements of the people and produces several raw materials for industries. But because of animal interference in agricultural lands, there will be huge loss of crops. Crop will be totally getting destroyed. There will be large amount of loss of farmer. To avoid these financial losses it is very important to protect agricultural field or farms from animal. To overcome this problem, in our

Page 19-24© MANTECH PUBLICATIONS 2017. All Rights Reserved

proposed work we shall design a system to prevent the entry of animals into the farm.

Main purpose this is to develop prohibitive fencing to the farm, to avoid losses due to animals. These prohibitive fencing protect the crop from damaging that indirectly increase yield of the crop. The develop system will not harmful and injurious to animal as well as human beings. Solar energy can be utilized to energize such fence arrangement. Solar power has been chosen for this application due to which the dependency on the conventional power supply can be reduced and problem of energy crisis can also be overcome.

In comparison with the non-renewable energies such as coal, gasoline and oil, solar power is becoming increasingly popular as it produces no pollution and requires minimum maintenance. The energy from the sun is free and it also has the advantage of reducing the power losses when converting the energy.

An energizer converts 120-volt electrical power or power from a battery into high voltage, short duration electrical pulses. These electrical pulses typically range from 2000 to 20,000 volts with durations of 1/1000 to 3/10,000 of a second. These short duration pulses may cause avoidance behavior but are not harmful to the animal there are two different electrical circuits involved in the operation of typical energizer (Figure 1). The power circuit (60Hz) carries 120-volt electrical power from a service panel to the energizer. Most fencers are plugged into a receptacle. As with any electrical circuit, the electric current must flow in a loop.

The current path for the farm power circuit is out through one 120volt (hot) wire and back on the neutral wire. The primary function of the grounding system is to conduct fault current and quickly operate protective devices The second circuit is between the energizer and the fence. The low voltage power coming into the energizer is converted to very short duration electrical pulses. The energizer pulse flows out through the high voltage lead-out from the energizer to the fence only if an animal or something else touches the wire to complete the circuit back through the earth. Once the current is in the earth it flows to an earth-return rod and earth return wire back to the energizer. The energizer circuit is the same for battery powered energizers, except a 120- volt power circuit is not used.

Scope of Work:

Page 19-24© MANTECH PUBLICATIONS 2017. All Rights Reserved

- To design a security system for farm protection
- Prohibit the entry of animal into the farm
- Use GSM module for alerting use.
- Design a system that sounds when animal tries to enter into the farm in night flash light will focus on that side.

OVERVIEW OF SEMINAR

2.1 Proposed Fence System

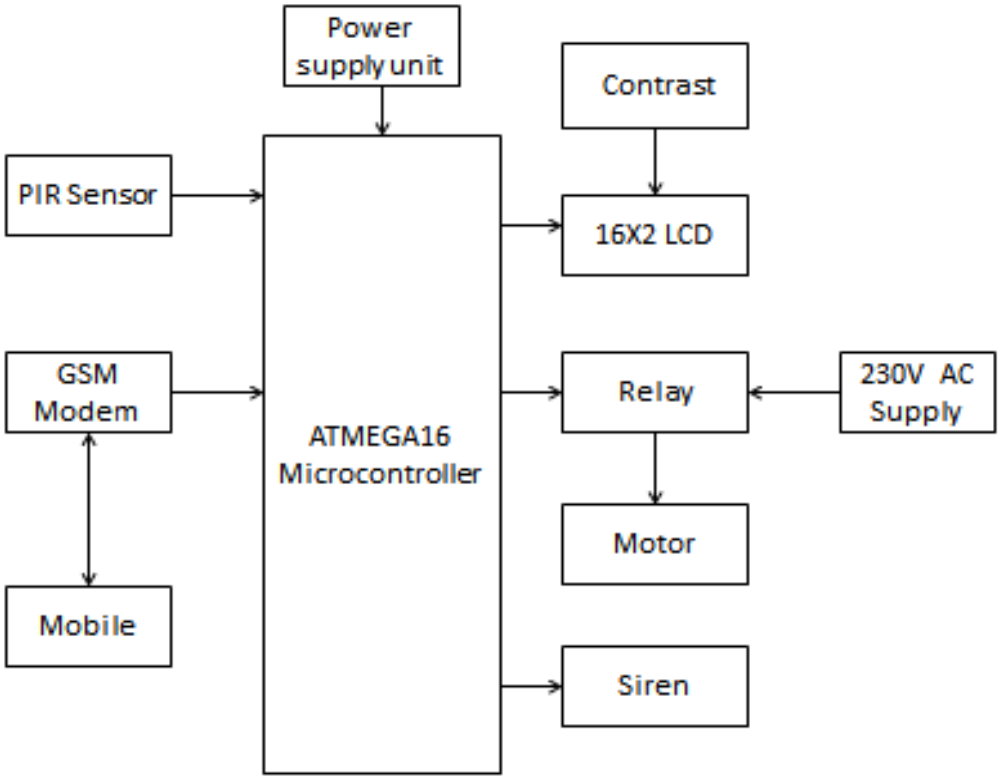

Page 19-24© MANTECH PUBLICATIONS 2017. All Rights Reserved

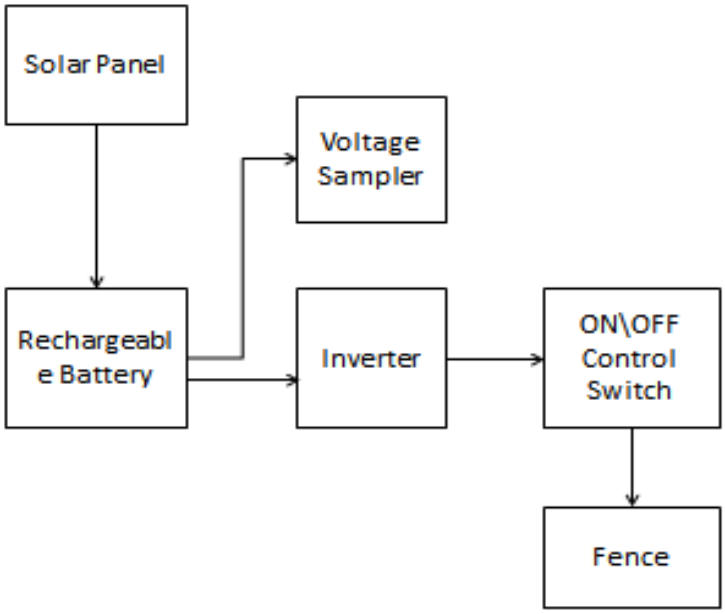

Figure 2.1 Design of Fencing Circuit using GSM for Agriculture

2.2Working

This fence system is powered by a 12V rechargeable battery. A solar panel is connected to the battery to charge on day time. A normal PN junction diode is used for unidirectional low of charge current. The battery also can be charged from house hold AC supply of 230V, 50 Hz. The battery charger circuit is designed to charge the battery with the help of house hold AC supply for emergency conditions. This circuit uses regulated 12V, 750mA power supply. 7812 three terminal voltage regulator is used for voltage regulation.

Bridge type full wave rectifier is used to rectify the ac output of secondary of 230/18V step down transformer. To every system, there is a requirement of one or more control units. In the block diagram of transmitter, only one control system is use. It contains ATMEGA16 microcontroller which belongs to the AVR family of microcontrollers. The blocks shown in fig are put-up in such a way that, a most important block is Power supply. The power supply should be regulated DC. The PIR sensor detects a motion. This sensing output is feed to the control unit i.e. ATMEGA16 microcontroller and after siren on automatically. Similarly if any one break the

Page 19-24© MANTECH PUBLICATIONS 2017. All Rights Reserved

fencing then automatically message send to owner mobile that someone break fencing. And send signal to microcontroller after siren on automatically. If the farmer wants to on or off motor wirelessly using mobile it will possible by it. Message transmitted to receiver side GSM modem receive message and transmit signal to controller unit and using relay motor will on or off.

CONCLUSION

In this way, fence circuit is grounded by touching it to the animal then system will be activated. Buzzer will be activated. So that wild animals will not enter into the farm. It will run away. GSM module sends message to the farmer to alert him, after the activation of system. From this it is concluded that the design system is very useful and affordable to the farmer. The design system will not be dangerous to animal and human being, and it protects farm. In the future, there will be very large scope, this project can be made based on Image processing in which wild animal can detect by cameras and if it comes towards farm then system will be directly activated through wireless networks.

REFERENCES

1) Chaitali R. Fule and Pranjali K. Awachat, “Design and Implementation of Real Time IrrigationSystem using a Wireless Sensor Network”, Proceedings ofthe International Journal of Advance Research in ComputerScience and Management Studies, Volume 2, Issue 1.

2) M. Lincy Luciana, B.Ramya, and A. Srimathi, “Automatic Drip Irrigation Unit Using PIC Controller”,Proceedings of the International Journal of LatestTrends in Engineering and Technology, Vol. 2, Issue 3.

3) H. Tingale and N. N. Kasat, “AutomatedIrrigation System”, Proceedings of the International Journalof Engineering Research and Development, Volume4, Issue 11.

4) K. Prathyusha, M. Chaitanya Suman, “Designof embedded systems for the automation of drip irrigation”, International journal of application or innovation inengineering of management, volme 1, Issue 2.

Page 19-24© MANTECH PUBLICATIONS 2017. All Rights Reserved

5) Cuihong Liu Wentao,RenBenhua, Zhang Changyi, "The application of soil temperature measurement byLM35 temperature sensors", International conference onElectronic and Mechanical Engineering and InformationTechnology (EMEIT),

6) Andrew J. Skinner and Martin F. Lambert, "An Automatic Soil Pore-Water Salinity SensorBased on a Wetting-Front Detector", IEEE Sensorsjournal, vol. 11, no. 1.

Page 19-24© MANTECH PUBLICATIONS 2017. All Rights Reserved